DWG=SA498089-FVR0_4AS1S-4

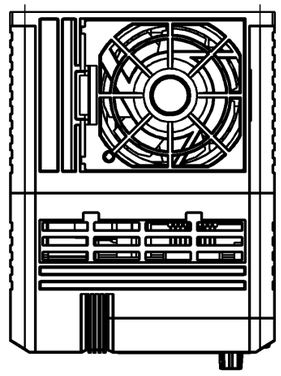

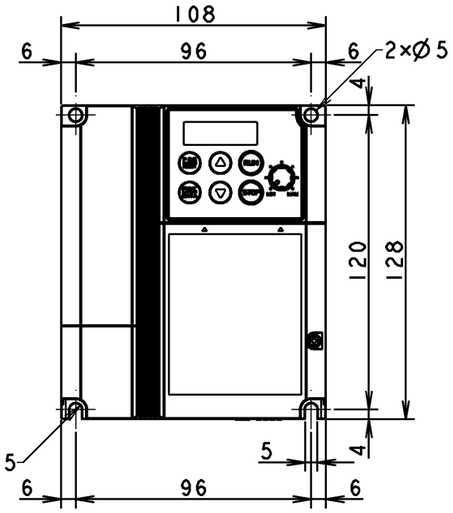

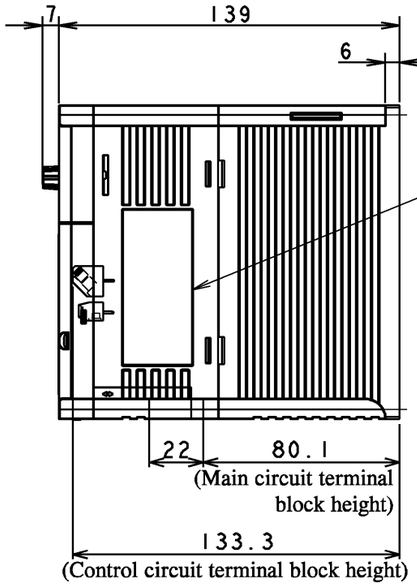

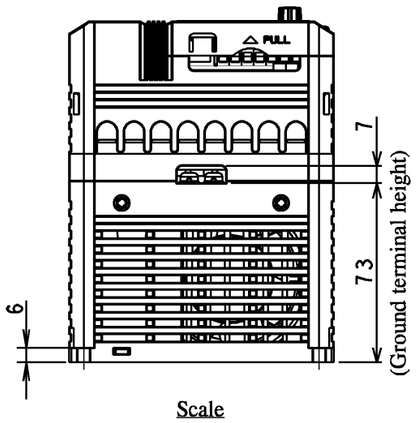

Scale
1:2.5

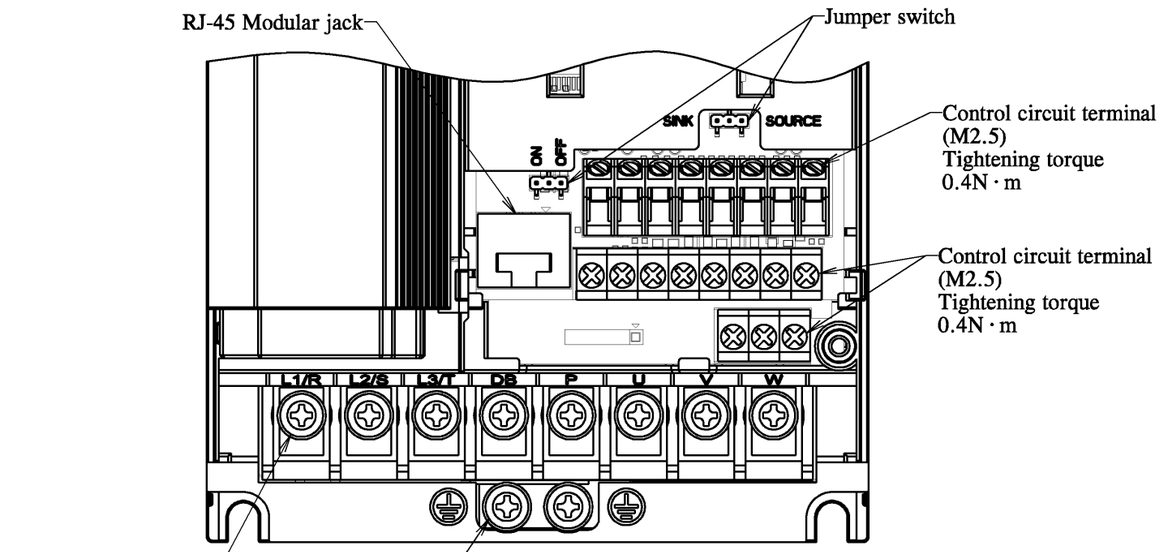

Terminal location
Scale (1:1)

Specifications		
Type		FVR0.4AS1S-4#
Applicable motor rating		0.4kW
Souce (Input) Ratings	Phase	3PH
	Voltage	380-480V
	Frequency	50/60Hz
	Current	1.7A
Output Ratings	Phase	3PH
	Capacity	1.1kVA
	Voltage	380-480V
	Range of Frequency	1-400Hz
	Current	1.5A
	Overload capability	150%-1min 200%-0.5s
Degree of protection		IP20
Mass		0.8kg

Control circuit terminal

Y1	Y1E	FMA	C1	PLC	X1	X2	X3

DX+	DX-	13	12	11	FWD	REV	CM

30A	30B	30C

Main circuit terminal / Ground terminal

L1/R	L2/S	L3/T	DB	P	U	V	W

⏚G	G⏚

Table 1

Destination / Manual	Code
China / Chinese	C
Europe / English	E

Note 1 : (#) in Type line replaces any of destination codes listed in Table 1.

DIMENSIONS IN mm

REVISIONS		DATE	NAME	APPROVED
	DRAWN	2017-08-29	SK/T.Yoshikawa	
	CHECKED	2017-08-29	H.Mizutani	T.Ichihara

Fuji Electric Co., Ltd.

REF.

TITLE: External Dimensions

FVR0.4AS1S-4#

DWG. CODE

DWG.NO. SA498089