DWG=SA498090-FVR0_75AS1S-4

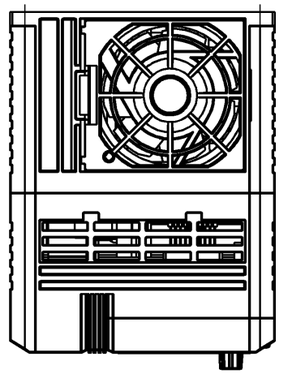

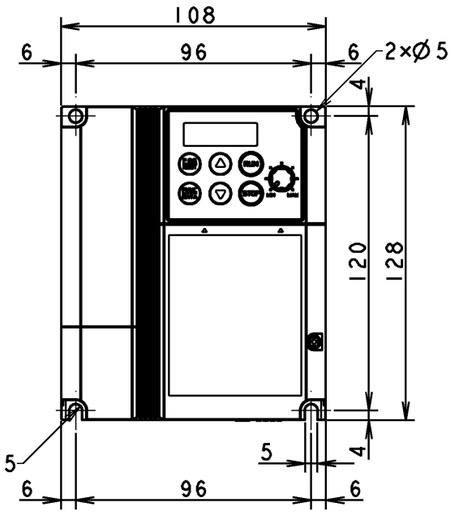


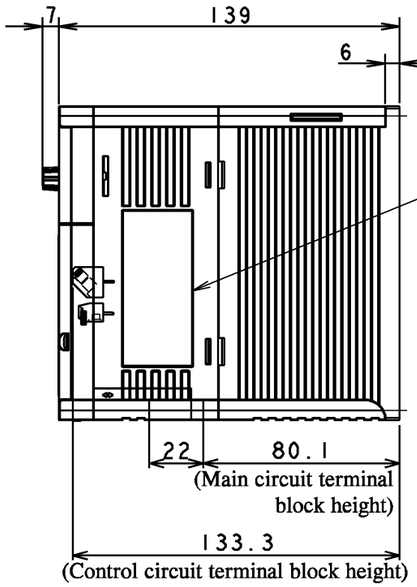


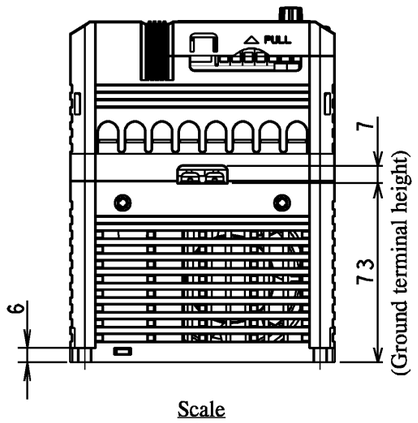


Scale
1:2.5

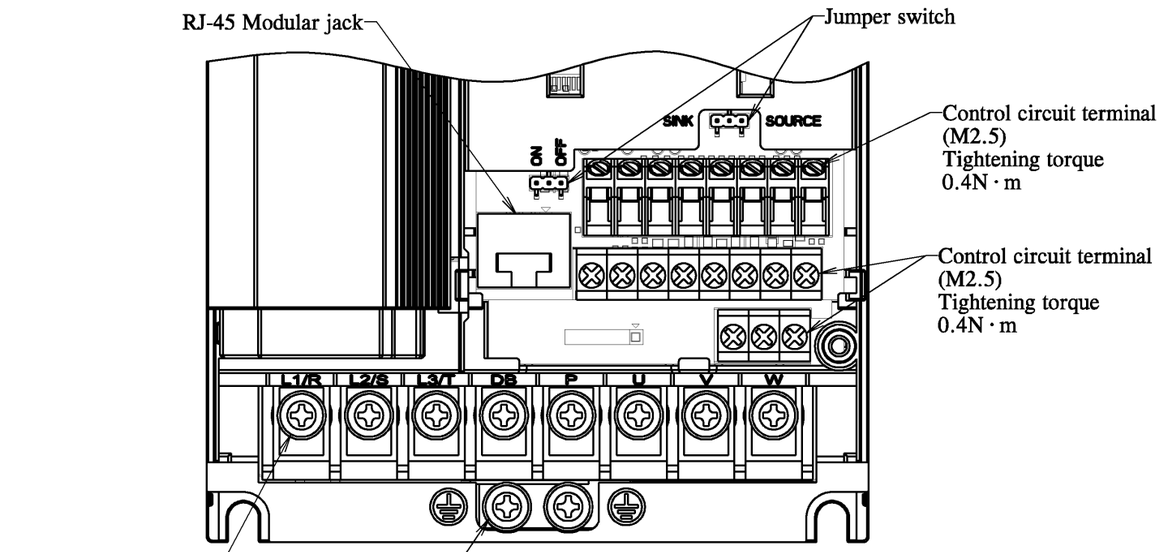


Terminal location
Scale (1:1)

| Specifications | | |
|---|---|---|
| Type | | FVR0.75AS1S-4# |
| Applicable motor rating | | 0.75kW |
| Souce (Input) Ratings | Phase | 3PH |
| | Voltage | 380-480V |
| | Frequency | 50/60Hz |
| | Current | 3.1A |
| Output Ratings | Phase | 3PH |
| | Capacity | 1.9kVA |
| | Voltage | 380-480V |
| | Range of Frequency | 1-400Hz |
| | Current | 2.5A |
| | Overload capability | 150%-1min<br>200%-0.5s |
| Degree of protection | | IP20 |
| Mass | | 0.9kg |

Control circuit terminal

| Y1 | Y1E | FMA | C1 | PLC | X1 | X2 | X3 |
|---|---|---|---|---|---|---|---|

| DX+ | DX- | 13 | 12 | 11 | FWD | REV | CM |
|---|---|---|---|---|---|---|---|

| 30A | 30B | 30C |
|---|---|---|

Main circuit terminal / Ground terminal

| L1/R | L2/S | L3/T | DB | P | U | V | W |
|---|---|---|---|---|---|---|---|

| ⏚ | G | G | ⏚ |
|---|---|---|---|

Table 1

| Destination / Manual | Code |
|---|---|
| China / Chinese | C |
| Europe / English | E |

Note 1 : (#) in Type line replaces any of destination codes listed in Table 1.

DIMENSIONS IN mm

| REVISIONS | | DATE | NAME | APPROVED |
|---|---|---|---|---|
| | DRAWN | 2017-08-29 | SK/T.Yoshikawa | |
| | CHECKED | 2017-08-29 | H.Mizutani | T.Ichihara |
| | Fuji Electric Co., Ltd. | | | REF. |

TITLE: External Dimensions

FVR0.75AS1S-4#

DWG. CODE

DWG.NO. SA498090