DWG=SA498094-FVR0_4AS1S-7

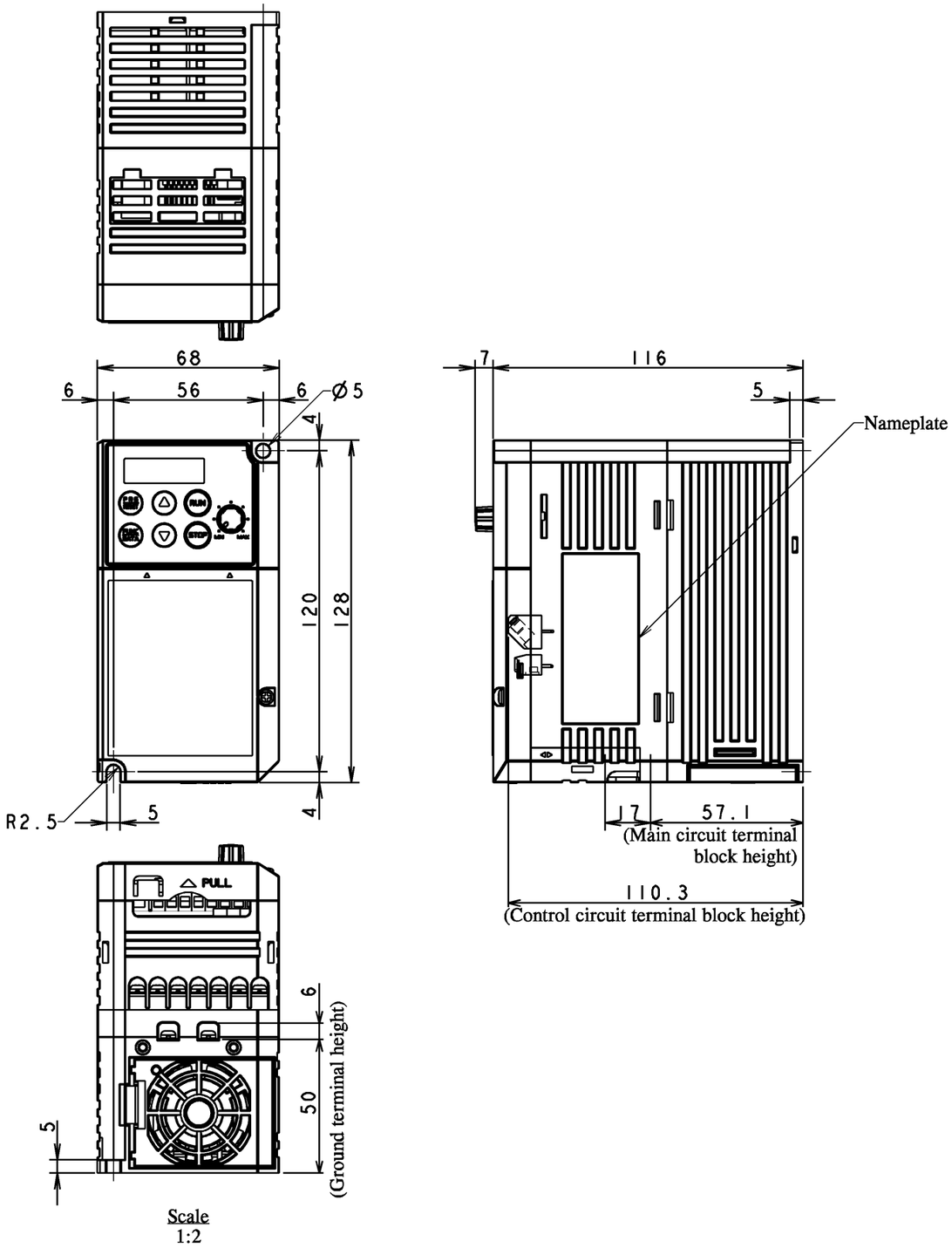

Scale
1:2

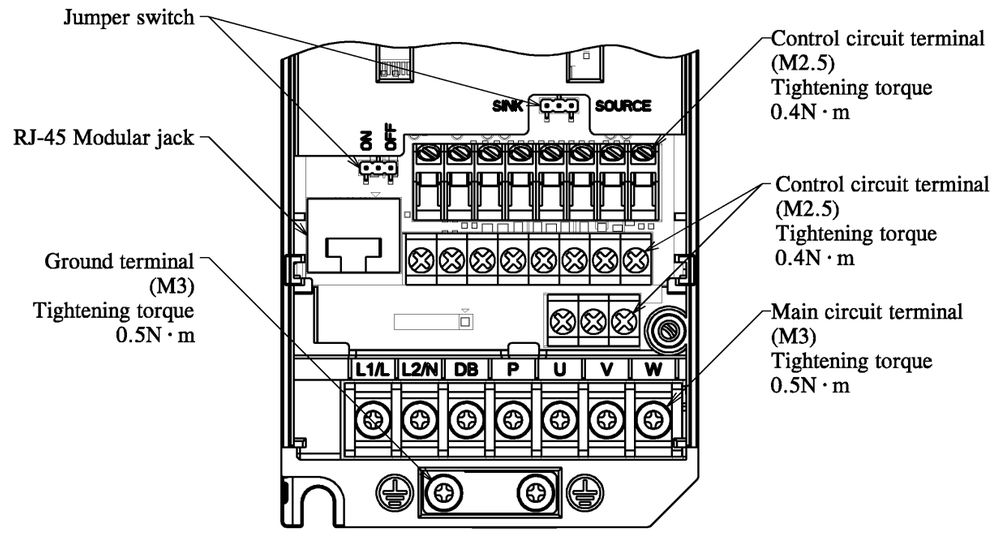

Terminal location
Scale (1:1)

Specifications		
Type		FVR0.4AS1S-7#
Applicable motor rating		0.4kW
Souce (Input) Ratings	Phase	1PH
	Voltage	200-240V
	Frequency	50/60Hz
	Current	5.4A
Output Ratings	Phase	3PH
	Capacity	0.9kVA
	Voltage	200-240V
	Range of Frequency	1-400Hz
	Current	2.5A
	Overload capability	150%-1min 200%-0.5s
Degree of protection		IP20
Mass		0.6kg

Control circuit terminal

Y1	Y1E	FMA	C1	PLC	X1	X2	X3

DX+	DX-	13	12	11	FWD	REV	CM

30A	30B	30C

Main circuit terminal / Ground terminal

L1/L	L2/N	DB	P	U	V	W

⏚G G⏚

Table 1

Destination / Manual	Code
China / Chinese	C
Europe / English	E

Note 1 : (#) in Type line replaces any of destination codes listed in Table 1.

DIMENSIONS IN mm

REVISIONS		DATE	NAME	APPROVED
	DRAWN	2017-08-29	SK/T.Yoshikawa	
	CHECKED	2017-08-29	H.Mizutani	T.Ichihara
	Fuji Electric Co., Ltd.			REF.

TITLE: External Dimensions
FVR0.4AS1S-7#

DWG. CODE
DWG.NO. SA498094