DWG=SA498097-FVR2_2AS1S-7

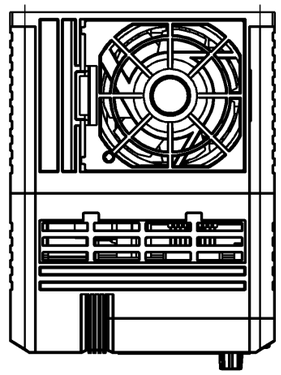

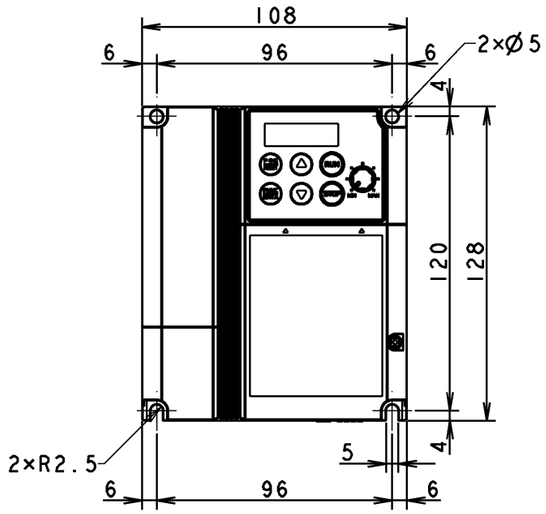

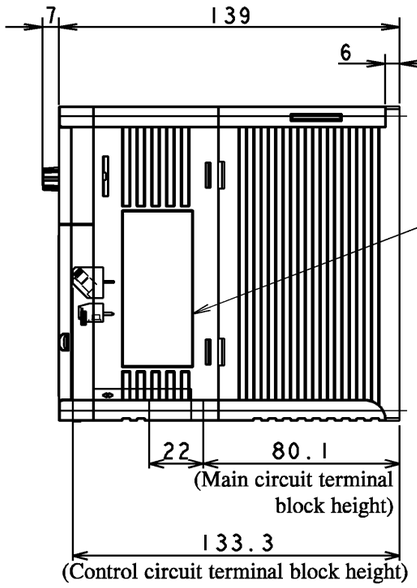

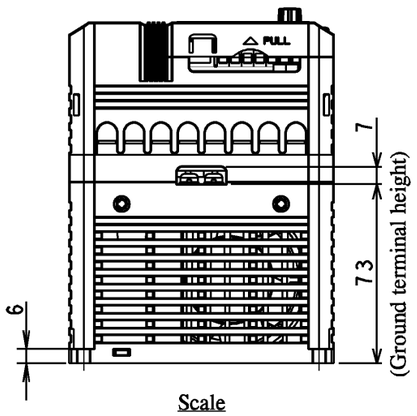

Scale
1:2.5

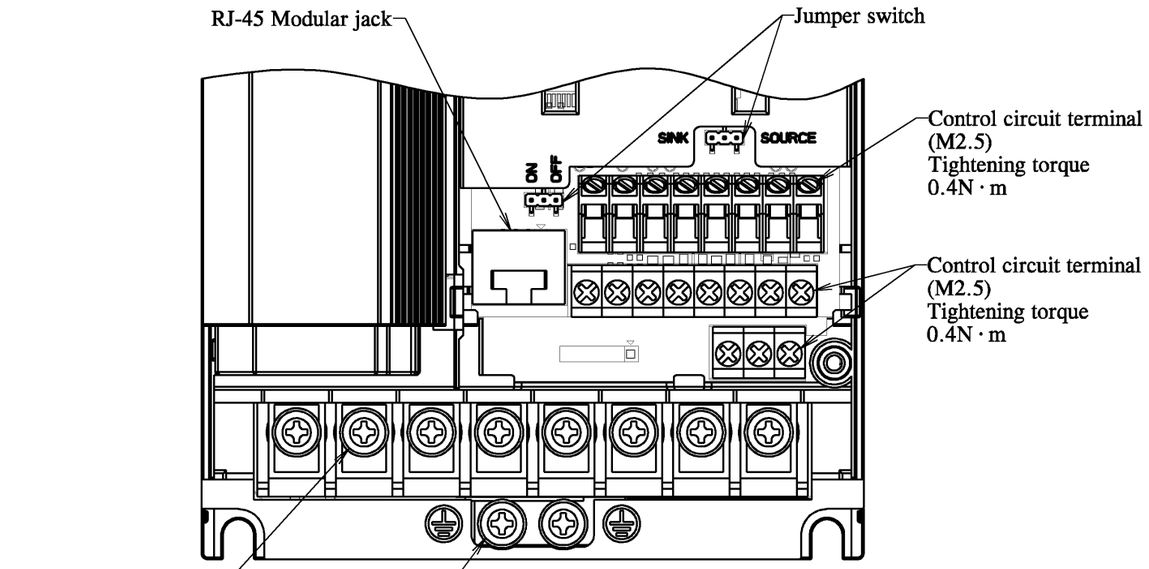

Terminal location
Scale (1:1)

Specifications		
Type		FVR2.2AS1S-7#
Applicable motor rating		2.2kW
Souce (Input) Ratings	Phase	1PH
	Voltage	200-240V
	Frequency	50/60Hz
	Current	24A
Output Ratings	Phase	3PH
	Capacity	3.8kVA
	Voltage	200-240V
	Range of Frequency	1-400Hz
	Current	10.0A
	Overload capability	150%-1min 200%-0.5s
Degree of protection		IP20
Mass		1.1kg

Control circuit terminal

Y1	Y1E	FMA	C1	PLC	X1	X2	X3

DX+	DX-	13	12	11	FWD	REV	CM

30A	30B	30C

Main circuit terminal / Ground terminal

	L1/L	L2/N	DB	P	U	V	W

⏚	G	G	⏚

Table 1

Destination / Manual	Code
China / Chinese	C
Europe / English	E

Note 1 : (#) in Type line replaces any of destination codes listed in Table 1.

DIMENSIONS IN mm

REVISIONS		DATE	NAME	APPROVED	
	DRAWN	2017-08-29	SK/T.Yoshikawa		
	CHECKED	2017-08-29	H.Mizutani	T.Ichihara	
	Fuji Electric Co., Ltd.			REF.	

TITLE: External Dimensions

FVR2.2AS1S-7#

DWG. CODE

DWG.NO. SA498097